First-Order Logic

Chapter 8

Outline

- Why FOL?
- Syntax and semantics of FOL
- Using FOL
- Wumpus world in FOL
- Knowledge engineering in FOL

Pros/cons of propositional logic

☺ Propositional logic is declarative (recall TELL/ASK)

☺ Propositional logic allows partial/disjunctive/negated information (unlike most data structures and databases)

☺ Propositional logic is compositional:

- meaning of $B_{1,1} \wedge P_{1,2}$ is derived from meaning of $B_{1,1}$ and of $P_{1,2}$

☺ Meaning in propositional logic is context-independent

- (unlike natural language, where meaning depends on context)

☹ Propositional logic has very limited expressive power

- (unlike natural language)
- E.g., cannot say "pits cause breezes in adjacent squares“
  - except by writing one sentence for each square

First-order logic

- Whereas propositional logic assumes the world contains facts,
- first-order logic (like natural language) assumes the world contains
  - Objects: people, houses, numbers, colors, baseball games, wars, …
  - Relations: red, round, prime, brother of, bigger than, part of, comes between, …
  - Functions: father of, best friend, one more than, plus, …

Syntax of FOL: Basic elements

- Constants UGA, GaTech, 2,...
- Predicates Brother, Greater, President...
- Functions Sqrt, NumStudents, Length...
- Variables x, y, a, b,...
- Connectives $\neg$, $\Rightarrow$, $\wedge$, $\vee$, $\Leftrightarrow$
- Equality =
- Quantifiers $\forall$, $\exists$

Atomic sentences

Atomic sentence = *predicate* ($term_1$,...,$term_n$)
or $term_1 = term_2$

Term = *function* ($term_1$,...,$term_n$)
or *constant* or *variable*

- E.g., *President(UGA, Adams), Greater(NumStudents(UGA), NumStudents(GaTech))*

Complex sentences

- Complex sentences are made from atomic sentences using connectives

$$\neg S,\ S_1 \wedge S_2,\ S_1 \vee S_2,\ S_1 \Rightarrow S_2,\ S_1 \Leftrightarrow S_2,$$

E.g. *Sibling(KingJohn,Richard)* $\Rightarrow$ *Sibling(Richard,KingJohn)*

Greater(2,1) $\vee$ $\leq$ *(1,2)*

Greater(2,1) $\wedge$ $\neg$ *Greater(2,1)*

Truth in first-order logic

- Sentences are true with respect to a model and an interpretation

- Model contains objects (domain elements) and relations among them

- Interpretation specifies referents for

  constant symbols → objects

  predicate symbols → relations

  function symbols → functional relations

- An atomic sentence *predicate(term$_1$,...,term$_n$)* is true iff the objects referred to by *term$_1$,...,term$_n$* are in the relation referred to by *predicate*
  e.g., *USG(UGA, GaTech, UWG, VSU, MCG)*

Models for FOL: Example

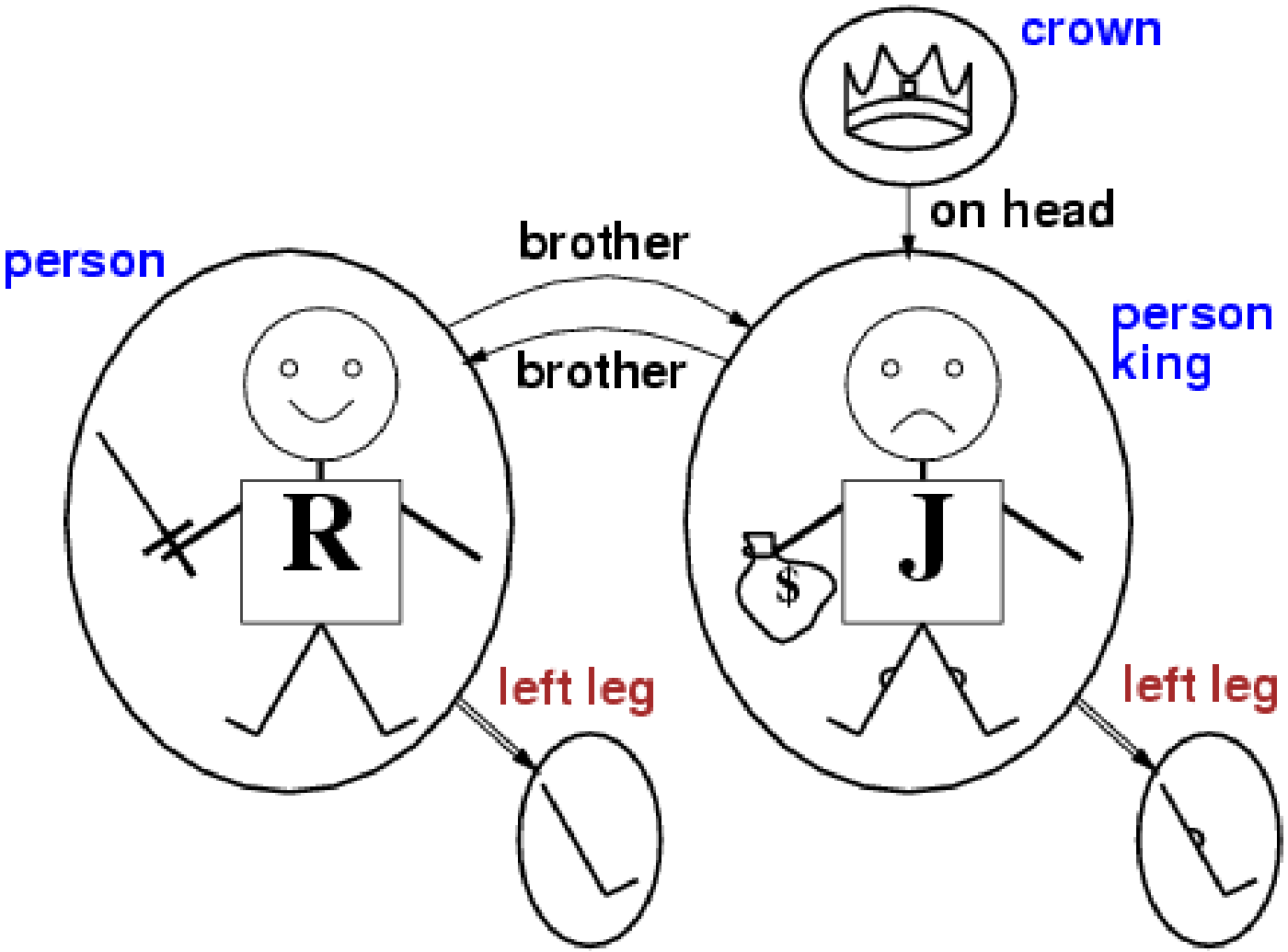

Universal quantification

- $\forall$<*variables*> <*sentence*>

Everyone at UGA is smart (note UoD: x ϵ Students):
$\forall$x At(x, UGA) $\Rightarrow$ Smart(x)

- $\forall$x *P* is true in a model *m* iff *P* is true with *x* being each possible object in the model

- Roughly speaking, equivalent to the conjunction of instantiations of *P*

At(John, UGA) $\Rightarrow$ Smart(John)
$\wedge$ At(Richard, UGA) $\Rightarrow$ Smart(Richard)
$\wedge$ At(Jim, UGA) $\Rightarrow$ Smart(Jim)
$\wedge$ ...

A common mistake to avoid

- Typically, $\Rightarrow$ is the main connective with $\forall$

- Common mistake: using $\wedge$ as the main connective with $\forall$:

  $\forall x\ At(x,UGA) \wedge Smart(x)$

  means “Everyone is at UGA and everyone is smart”

Existential quantification

- $\exists$<*variables*> <*sentence*>

- Someone at GaTech is smart:
- $\exists x$ At(x, GaTech) $\wedge$ Smart(x)

- $\exists x$ *P* is true in a model *m* iff *P* is true with *x* being some possible object in the model

- Roughly speaking, equivalent to the disjunction of instantiations of *P*
-

  At(John, GaTech) $\wedge$ Smart(John)
  $\vee$ At(Richard, GaTech) $\wedge$ Smart(Richard)
  $\vee$ At(Jim, GaTech) $\wedge$ Smart(Jim)
  $\vee$ ...

Another common mistake to avoid

- Typically, $\wedge$ is the main connective with $\exists$
- Common mistake: using $\Rightarrow$ as the main connective with $\exists$:
- $$\exists x\ At(x,UGA) \Rightarrow Smart(x)$$

  is true if there is anyone who is not at UGA! (recall implication is true if premise is false)

Properties of quantifiers

- $\forall x\ \forall y$ is the same as $\forall y\ \forall x$
- $\exists x\ \exists y$ is the same as $\exists y\ \exists x$
- $\exists x\ \forall y$ is not the same as $\forall y\ \exists x$
- $\exists x\ \forall y$ Loves(x,y)
  - "There is a person who loves everyone in the world"
- $\forall y\ \exists x$ Loves(x,y)
  - "Everyone in the world is loved by at least one person"

- Quantifier duality: each can be expressed using the other
- $\forall x$ Likes(x,IceCream) $\neg\exists x\ \neg$Likes(x,IceCream)

- $\exists x$ Likes(x,Broccoli) $\neg\forall x\ \neg$Likes(x,Broccoli)

Equality

- $term_1 = term_2$ is true under a given interpretation if and only if $term_1$ and $term_2$ refer to the same object

- E.g., definition of *Sibling* in terms of *Parent*:

$$\forall x,y\ Sibling(x,y) \Leftrightarrow [\neg(x = y) \wedge \exists m,f\ \neg(m = f) \wedge Parent(m,x) \wedge Parent(f,x) \wedge Parent(m,y) \wedge Parent(f,y)]$$

Using FOL

The kinship domain:

- Brothers are siblings

  $\forall x,y \;\; Brother(x,y) \Rightarrow Sibling(x,y)$

- One's mother is one's female parent

  $\forall m,c \;\; Mother(c) = m \Leftrightarrow (Female(m) \wedge Parent(m,c))$

- “Sibling” is symmetric (brother isn’t)

  $\forall x,y \;\; Sibling(x,y) \Leftrightarrow Sibling(y,x)$

Using FOL

The set domain (x is an element or object, could be a set):

- $\forall s : Set(s) \Leftrightarrow (s = \{\}) \vee (\exists x,s_2\ Set(s_2) \wedge s = \{x|s_2\})$
- $\neg\exists x,s : \{x|s\} = \{\}$ (can't decompose empty set)
- $\forall x,s : x \in s \Leftrightarrow s = \{x|s\}$ (no dups)
- $\forall x,s : x \in s \Leftrightarrow [\ \exists y,s_2 : (s = \{y|s_2\} \wedge (x = y \vee x \in s_2))]$
- $\forall s_1,s_2 : s_1 \subseteq s_2 \Leftrightarrow (\forall x : x \in s_1 \Rightarrow x \in s_2)$
- $\forall s_1,s_2 : (s_1 = s_2) \Leftrightarrow (s_1 \subseteq s_2 \wedge s_2 \subseteq s_1)$
- $\forall x,s_1,s_2 : x \in (s_1 \cap s_2) \Leftrightarrow (x \in s_1 \wedge x \in s_2)$
- $\forall x,s_1,s_2 : x \in (s_1 \cup s_2) \Leftrightarrow (x \in s_1 \vee x \in s_2)$

- $\{x|s\}$ means x is adjoined to set s

Interacting with FOL KBs

- Suppose a wumpus-world agent is using an FOL KB and perceives a smell and a breeze (but no glitter) at *t=5*:
-

  `Tell`(KB,Percept([Smell,Breeze,None],5))
  `Ask`(KB,∃a BestAction(a,5))

- I.e., does the KB entail some best action at *t=5*?

- Answer: *Yes*, {*a/Shoot*} ← substitution (binding list)

- Given a sentence *S* and a substitution σ,
- *S*σ denotes the result of plugging σ into *S*; e.g.,

  S = Smarter(x,y)
  σ = {x/Hillary,y/Bill}
  *S*σ = Smarter(Hillary,Bill)

- `Ask`(KB,S) returns some/all σ such that KB ⊨ σ

Knowledge base for the wumpus world

- Perception
  - $\forall$t,s,b Percept([s,b,Glitter],t) $\Rightarrow$ Glitter(t)
- Reflex
  - $\forall$t Glitter(t) $\Rightarrow$ BestAction(Grab,t)

Deducing hidden properties

- $\forall$x,y,a,b *Adjacent*([x,y],[a,b]) $\Leftrightarrow$
  [a,b] $\in$ {[x+1,y], [x-1,y],[x,y+1],[x,y-1]}

Properties of squares:

- $\forall$s,t *At*(Agent,s,t) $\wedge$ Breeze(t) $\Rightarrow$ Breezy(s)

Squares are breezy near a pit:

- Diagnostic rule---infer cause from effect

  $\forall$s Breezy(s) $\Rightarrow$ $\exists$r Adjacent(r,s) $\wedge$ Pit(r)

- Causal rule---infer effect from cause

  $\forall$r Pit(r) $\Rightarrow$ [$\forall$s Adjacent(r,s) $\Rightarrow$ Breezy(s)]

Knowledge engineering in FOL

1. Identify the task
2. Assemble the relevant knowledge
3. Decide on a vocabulary of predicates, functions, and constants
4. Encode general knowledge about the domain
5. Encode a description of the specific problem instance
6. Pose queries to the inference procedure and get answers
7. Debug the knowledge base

The electronic circuit domain

One-bit full adder

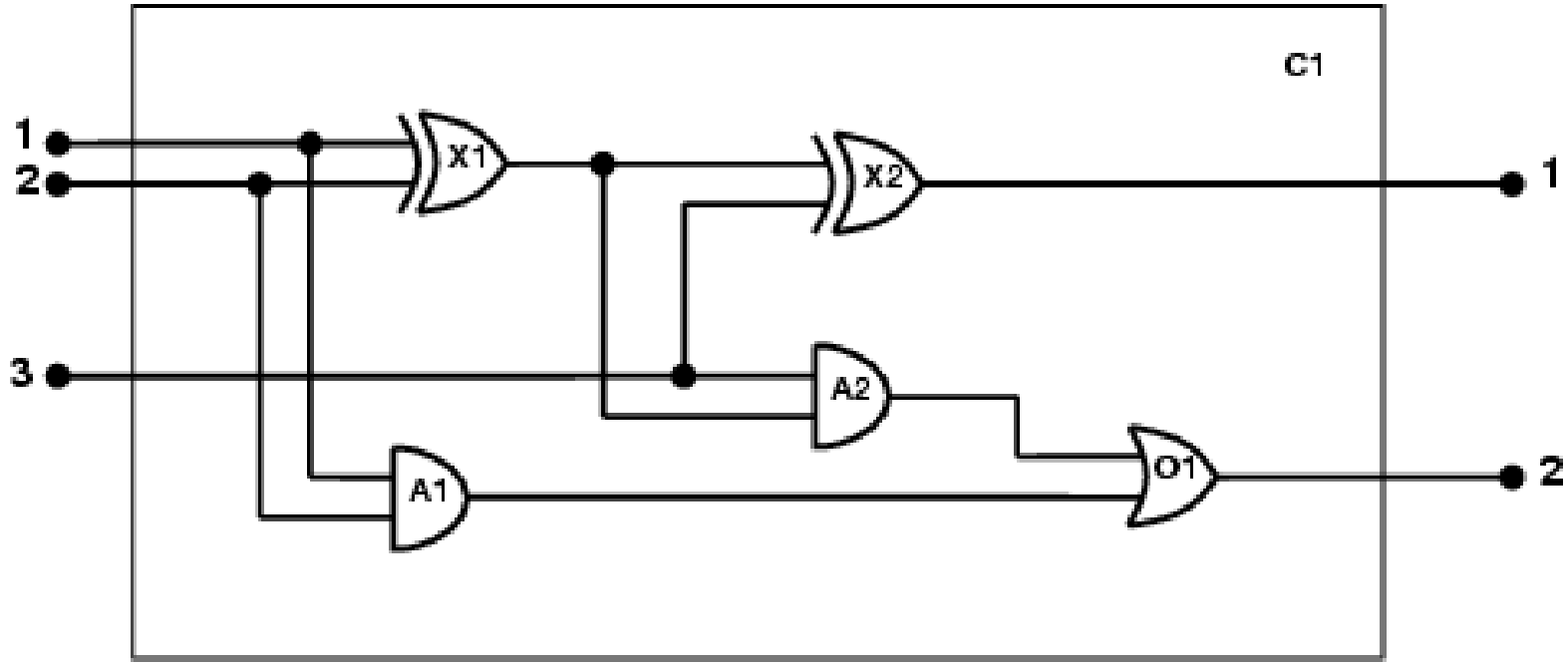

The electronic circuits domain

1. Identify the task
   - Does the circuit actually add properly? (circuit verification)
2. Assemble the relevant knowledge
   - Composed of wires and gates; Types of gates (AND, OR, XOR, NOT)
   - Irrelevant: size, shape, color, cost of gates
3. Decide on a vocabulary
   - Alternatives:

     $Type(X_1) = XOR$

     $Type(X_1, XOR)$

     $XOR(X_1)$

The electronic circuits domain

4. Encode general knowledge of the domain
   - $\forall t_1,t_2$ Connected(t_1, t_2) $\Rightarrow$ Signal(t_1) = Signal(t_2)
   - $\forall t$ Signal(t) = 1 $\vee$ Signal(t) = 0
   - $1 \neq 0$
   - $\forall t_1,t_2$ Connected(t_1, t_2) $\Rightarrow$ Connected(t_2, t_1)
   - $\forall g$ Type(g) = OR $\Rightarrow$ Signal(Out(1,g)) = 1 $\Leftrightarrow$ $\exists n$ Signal(In(n,g)) = 1
   - $\forall g$ Type(g) = AND $\Rightarrow$ Signal(Out(1,g)) = 0 $\Leftrightarrow$ $\exists n$ Signal(In(n,g)) = 0
   - $\forall g$ Type(g) = XOR $\Rightarrow$ Signal(Out(1,g)) = 1 $\Leftrightarrow$ Signal(In(1,g)) $\neq$ Signal(In(2,g))
   - $\forall g$ Type(g) = NOT $\Rightarrow$ Signal(Out(1,g)) $\neq$ Signal(In(1,g))
   - Etc.

The electronic circuits domain

5. Encode the specific problem instance

Type(X_1) = XOR
Type(X_2) = XOR
Type(A_1) = AND
Type(A_2) = AND
Type(O_1) = OR

Connected(Out(1,X_1),In(1,X_2))
Connected(Out(1,X_1),In(2,A_2))
Connected(Out(1,A_2),In(1,O_1))
Connected(Out(1,A_1),In(2,O_1))
Connected(Out(1,X_2),Out(1,C_1))
Connected(Out(1,O_1),Out(2,C_1))
Connected(In(1,C_1),In(1,X_1))
Connected(In(1,C_1),In(1,A_1))
Connected(In(2,C_1),In(2,X_1))
Connected(In(2,C_1),In(2,A_1))
Connected(In(3,C_1),In(2,X_2))
Connected(In(3,C_1),In(1,A_2))

The electronic circuits domain

6. Pose queries to the inference procedure

   What are the possible sets of values of all the terminals for the adder circuit?

   $\exists i_1,i_2,i_3,o_1,o_2\ Signal(In(1,C_1)) = i_1 \wedge Signal(In(2,C_1)) = i_2 \wedge Signal(In(3,C_1)) = i_3 \wedge Signal(Out(1,C_1)) = o_1 \wedge Signal(Out(2,C_1)) = o_2$

7. Debug the knowledge base

   May have omitted assertions like $1 \neq 0$

The electronic circuits domain

$\exists i_1,i_2,i_3,o_1,o_2$ Signal(In(1,C_1)) = i_1 $\wedge$ Signal(In(2,C_1)) = i_2 $\wedge$ Signal(In(3,C_1)) = i_3 $\wedge$ Signal(Out(1,C_1)) = o_1 $\wedge$ Signal(Out(2,C_1)) = o_2

i_1	i_2	i_3		O_1 (sum)	O_2 (carry)
0	0	0		0	0
0	0	1		1	0
0	1	0		1	0
0	1	1		0	1
1	0	0		1	0
1	0	1		0	1
1	1	0		0	1
1	1	1		1	1

Summary

- First-order logic:
  - objects and relations are semantic primitives
  - syntax: constants, functions, predicates, equality, quantifiers

- Increased expressive power: sufficient to define wumpus world and lots of other cool stuff too ☺